C.I.P.

6,5 x 47 Lapua

Country of Origin: FI

TAB.	I
Date	06-05-16
Revision	

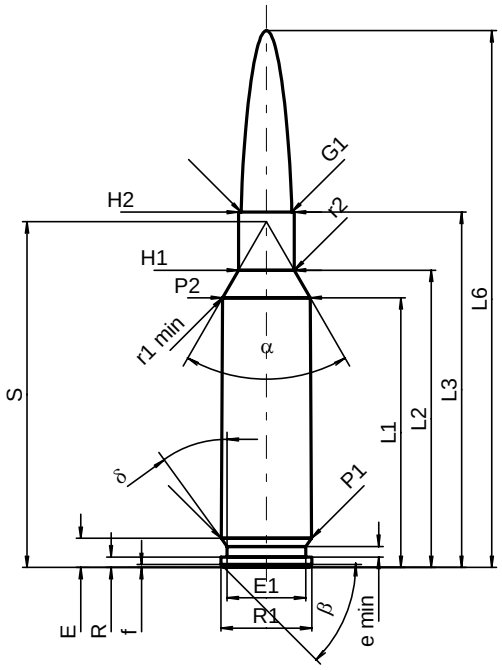

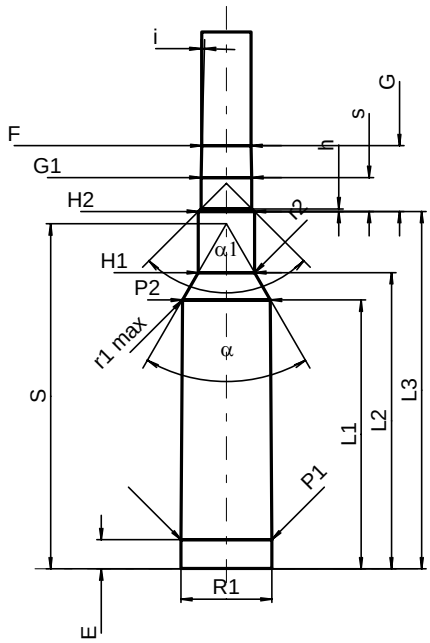

Scale 1:1

CARTRIDGE MAXI

Lengths

L1 1)	=	35.68	-0.20
L2 1)	=	39.31	-0.20
L3 1)	=	47.00	
L4	=		
L5	=		
L6	=	71.00	

Case Head

R	=	1.37
R1	=	12.01
R3	=	
E	=	3.85
E1	=	10.39
e min	=	1.40
δ	=	36°
f	=	0.38
β	=	45°

Powder Chamber

P1	=	11.95	
P2 1)*	=	11.59	-0.20

Junction Cone

α *	=	60°
S *	=	45.721
r1 min	=	1.00
r2	=	1.50

Collar

H1 *	=	7.40
H2 1)	=	7.40

Projectile

G1 1)*	=	6.71
G2	=	
F	=	
L3+G 1)	=	55.70

Pressures (Energies)
Method Transducer

Pmax	=	4350	bar
PK	=	5003	bar
PE	=	5438	bar
M	=	25.00	
EE	=	3300	Joule

Miscellaneous Dimensions

Fe	=	0.10
delta L	=	

CHAMBER MINI

Lengths

L1	=	35.57
L2	=	39.19
L3 1)	=	47.26

Breech

R	=	
R1	=	12.04
R2	=	
R3	=	
r	=	

Powder Chamber

E	=	3.85
P1 1)	=	11.99
P2 *	=	11.63

Junction Cone

α 1)*	=	60°
S *	=	45.64
r1 max	=	0.75
r2	=	1.75

Collar

H1 *	=	7.45
H2 1)	=	7.42

Commencement of Rifling

G1 1)*	=	6.72
G	=	8.70
α1	=	90°
h	=	0.35
s *	=	4.50
i 1)*	=	1°30'
w	=	

Barrel

F 1)*	=	6.50
Z 1)	=	6.70

Grooves

b	=	2.29	
N	=	6	
u	=	200.00	
Q	=	34.95	mm²

Dimensions in << mm >>
Dimensions and Tolerances for Proof Barrels
see Appendix CR 1.

Notes: 1) Check for safety reasons
* Basic dimensions